BOX AIR 6_2

Beverage Dispensing Tower

Part #	Faucets	Faucet distance	Product Lines	Cooling	Finish
PT6SS	6	3”	3/16” I.D. PVC, 5 long	Air Cooled	Brushed Stainless Steel Powder Coating Available

UBC Group USA

65 North Central Dr. O’Fallon, MO 63366, USA
Ph.: (636) 379-2226
Fax: (866) 659-8904
Toll Free: (888) 808-9286
Email: info@beer-co.us
Web: www.beer-co.us

UBC Group Latin America

Tokio 714 , Mexico City, Mexico, 03300
Ph: +(52) 55 2624 3458
Email: info@beer-co.com.mx
Web: www.beer-co.com.mx

UBC Group Canada

1715 Meyerside Drive, Unit 7-9,
Mississauga, ON, Canada, L5T1C5
ph.: +1 (905) 629-2597
Toll Free: +1 (866) 995-9965
fax.: +1 (905) 629-2577
Email: info@beer-co.ca

BOX AIR 6_2

Beverage Dispensing Tower

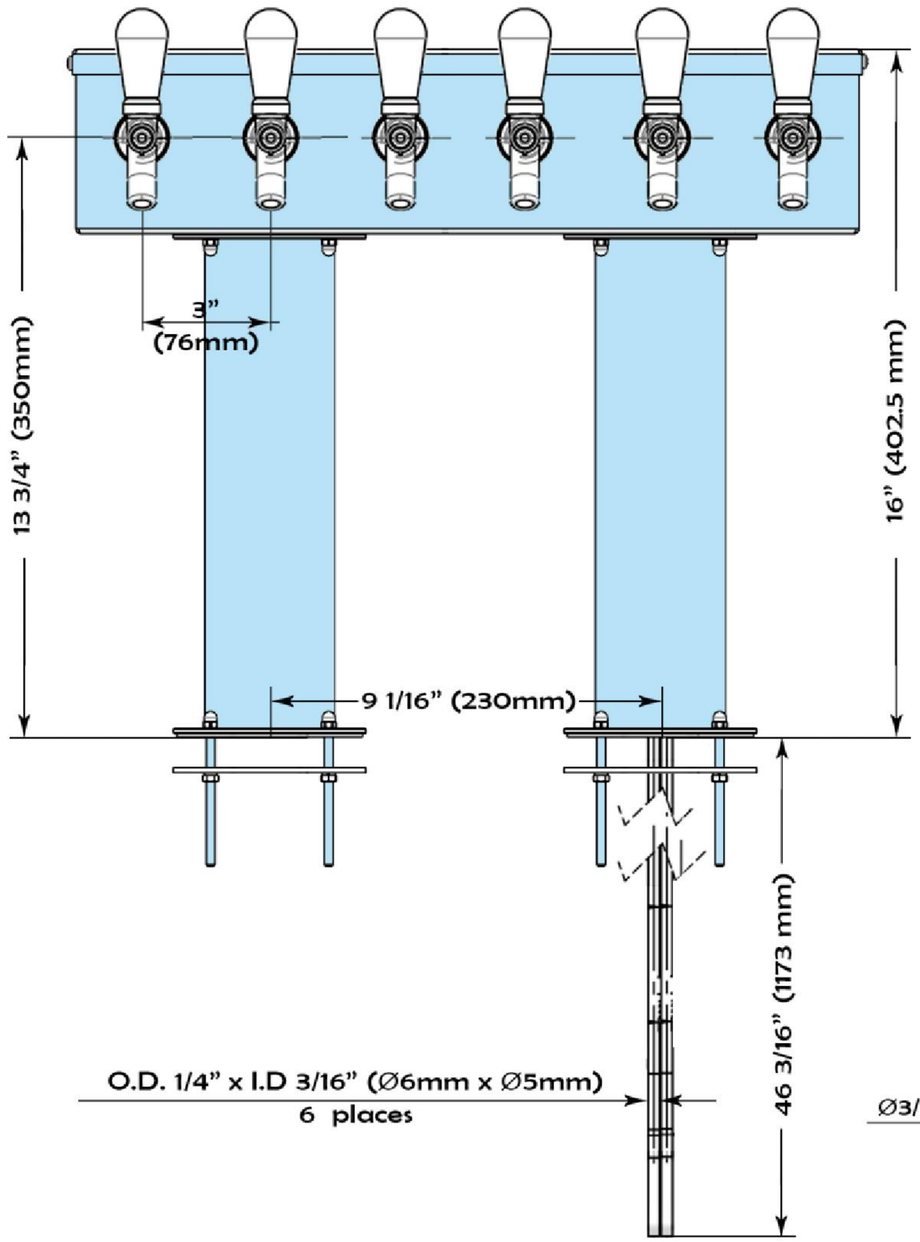

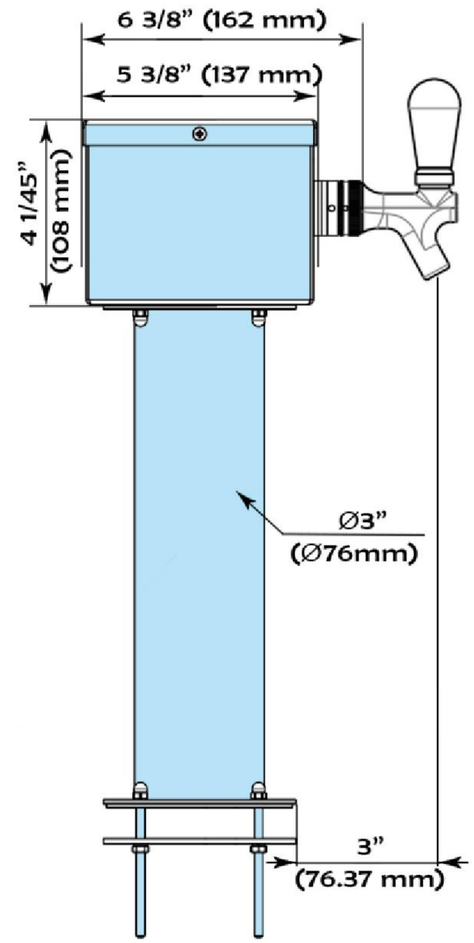

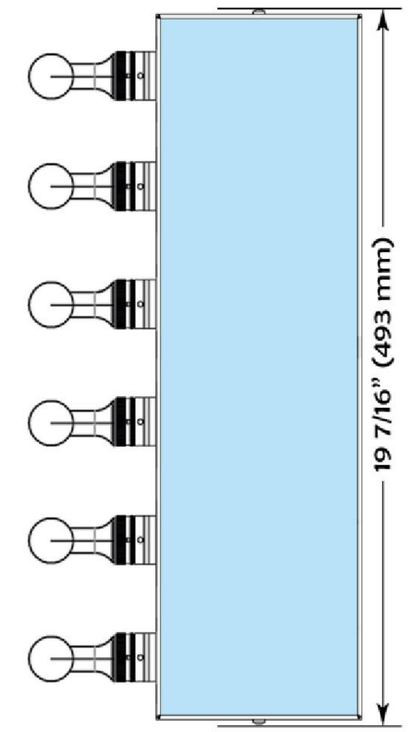

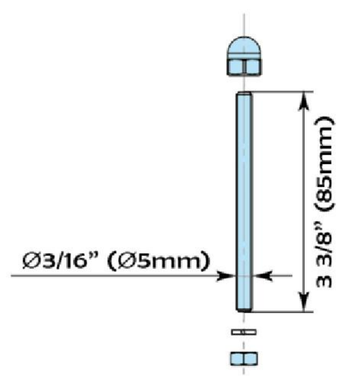

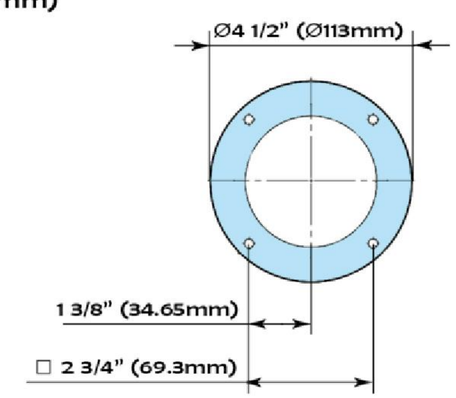

UBC Group USA

65 North Central Dr. O'Fallon, MO 63366, USA
Ph.: (636) 379-2226
Fax: (866) 659-8904
Toll Free: (888) 808-9286
Email: info@beer-co.us
Web: www.beer-co.us

UBC Group Latin America

Tokio 714 , Mexico City, Mexico, 03300
Ph: +(52) 55 2624 3458
Email: info@beer-co.com.mx
Web: www.beer-co.com.mx

UBC Group Canada

1715 Meyerside Drive, Unit 7-9,
Mississauga, ON, Canada, L5T1C5
ph.: +1 (905) 629-2597
Toll Free: +1 (866) 995-9965
fax.: +1 (905) 629-2577
Email: info@beer-co.ca