SCHAEFER KEGS

1/2 BBL / 58.9 LITERS

Special Features

- Durable
- Comfort Grip Handle
- Highly Adaptable
- 304 Stainless Steel
- 4" Tri-Clover Top Fitting
- 1 1/2" Tri-Clover Side Bung Fitting
- Other yeast brink keg sizes available by special request, with 2" or 4" TC top opening

SIZE/VOLUME	HEIGHT(IN)	DIAMETER (IN)	WEIGHT(LBS)
1/2 BBL (15.5 GALLONS)	**23.23**	**15.91**	**29.0**

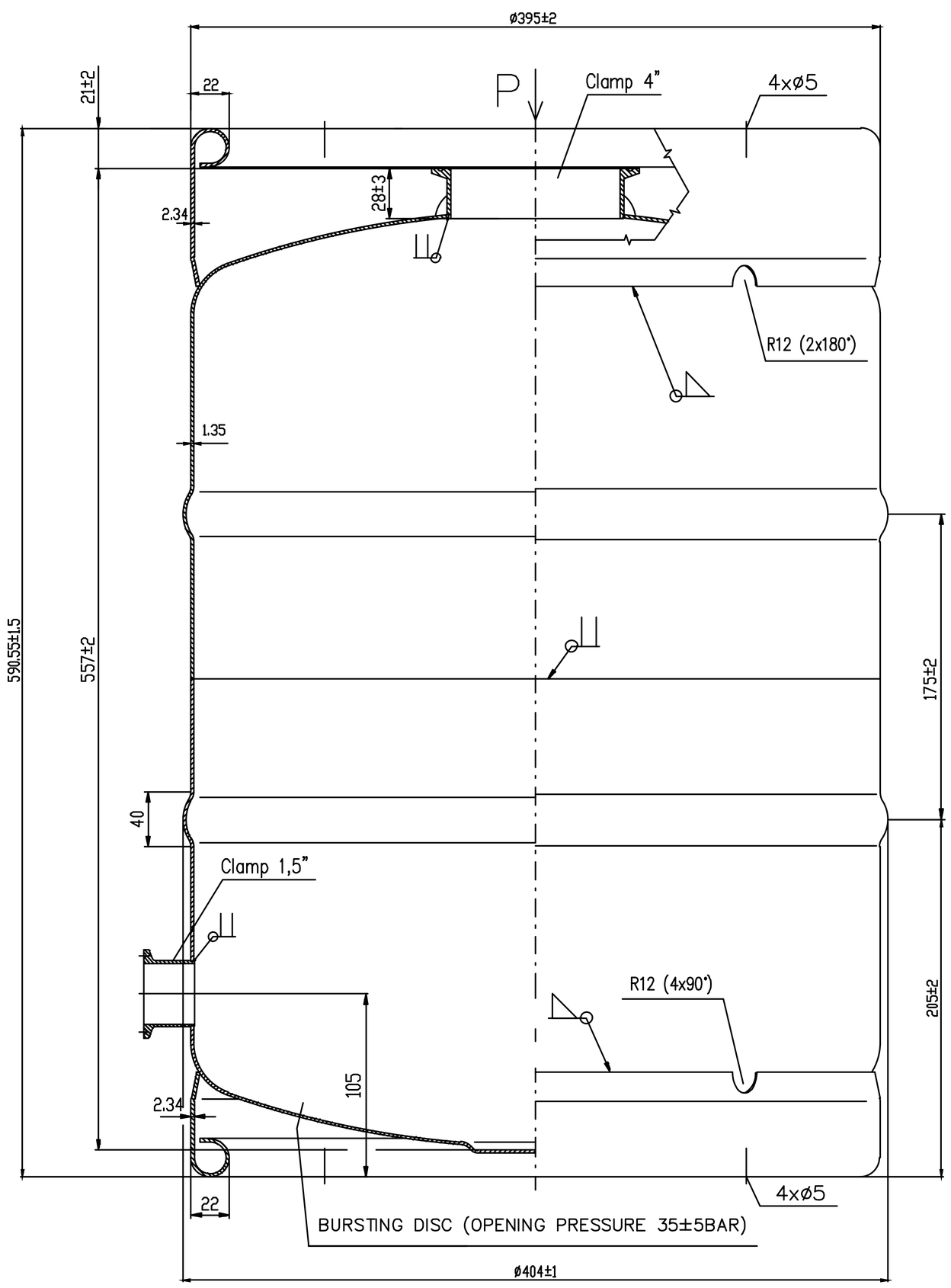

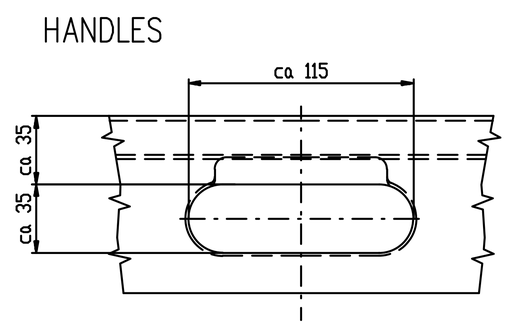

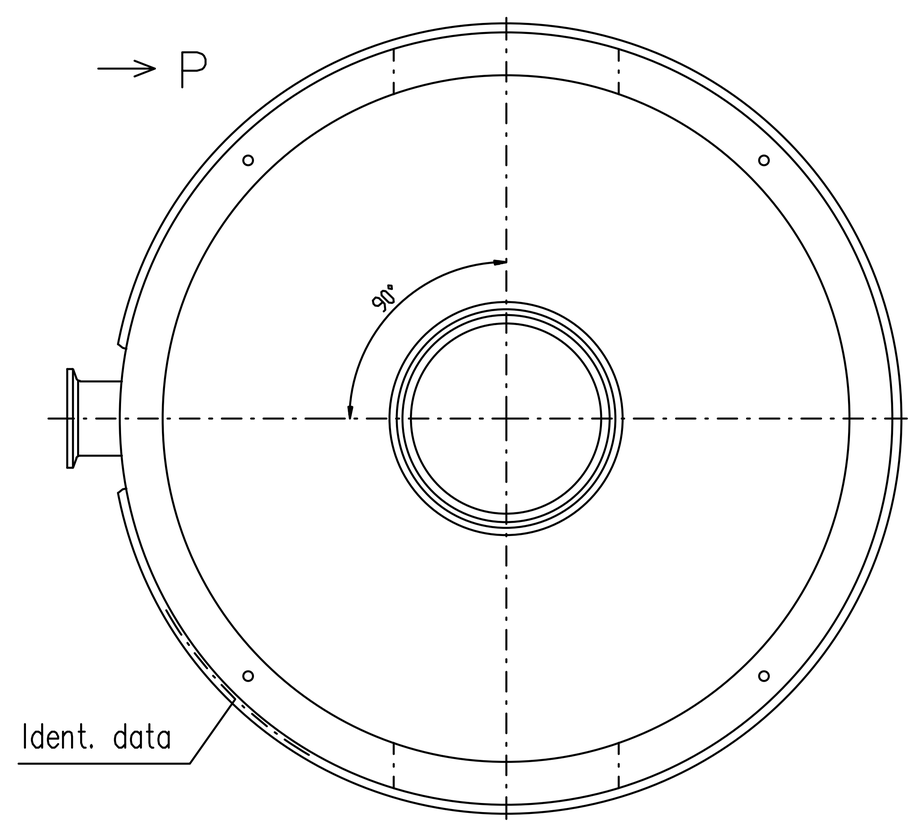

CANADA

UBC COOL CANADA INC
1715 MEYERSIDE DRIVE, UNIT 7-9,
MISSISSAUGA, ON, CANADA, L5T1C5

ph.: +1 (905) 629-2597
Toll Free: +1 (866) 995-9965
fax.: +1 (905) 629-2577
Email: info@beer-co.ca

USA

UBC DISTRIBUTION USA INC
65 NORTH CENTRAL DR.
O'FALLON, MO 63366

ph.: +1 (636) 379-2226
Toll Free: +1 (888) 808-9286
fax.: +1 (866) 659-8904
Email: info@beer-co.us

MÉXICO

GRUPO CERVECERO UKRANIANO,
S.A DE C.V. TOKIO 714, PORTALES SUR,
BENITO JUÁREZ CIUDAD DE MÉXICO 03300

Tel: +52 (55) 2624 3458
Cel: +52 1 (55) 48668127
Email: s.reaskos@beer-co.com.mx